FOR REFERENCE ONLY

REVISIONS - BP101002-___(cc)			
REV	DESCRIPTION	DATE/BY	DCN NO.

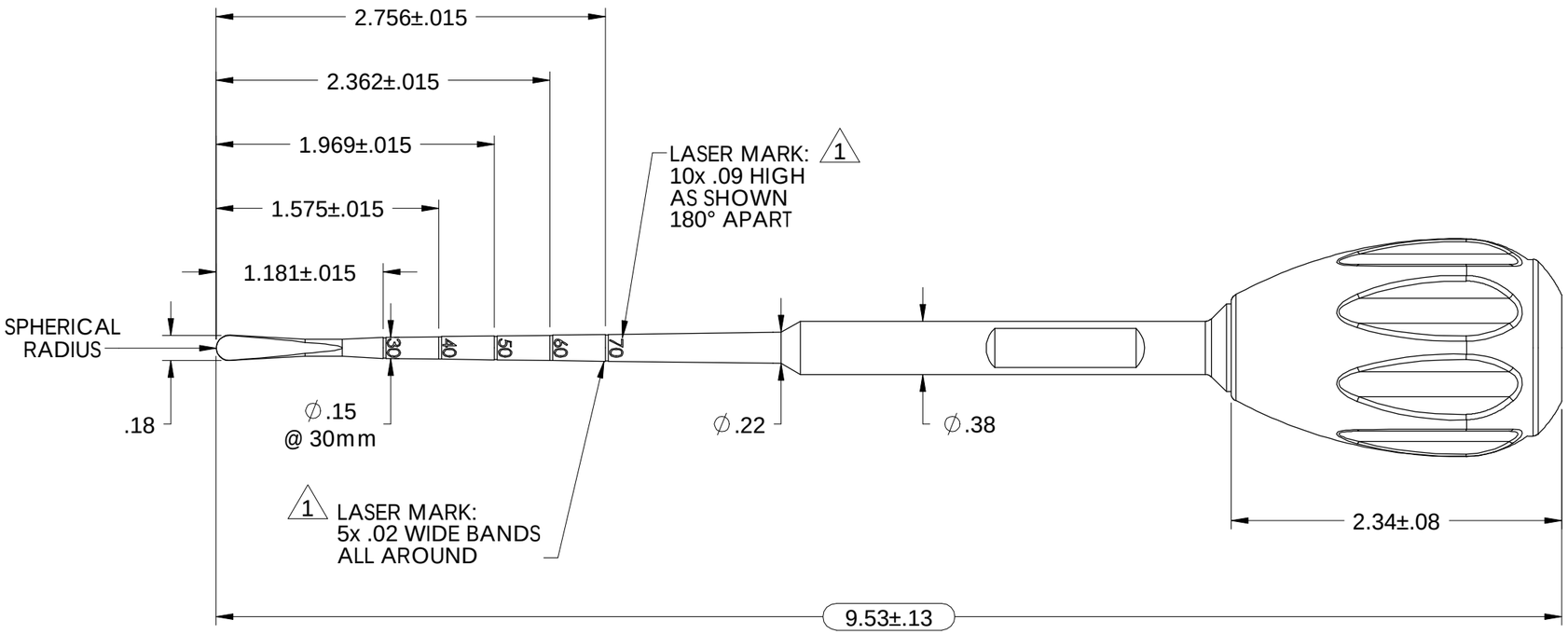

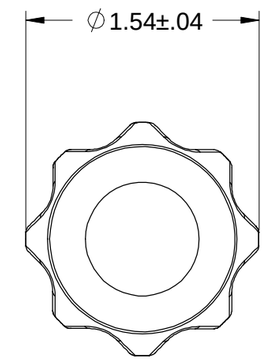

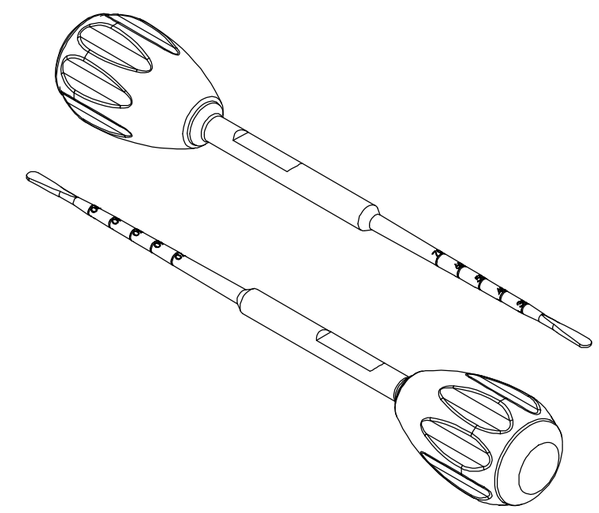

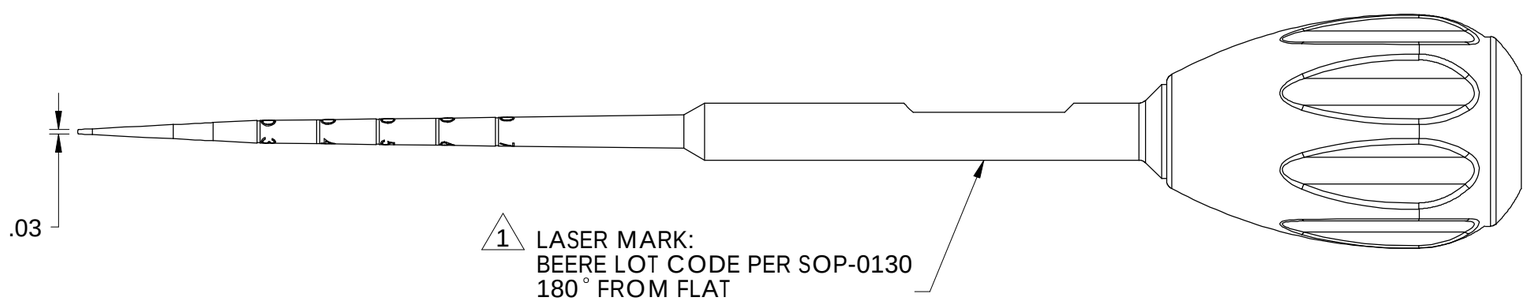

1 UNLESS OTHERWISE SPECIFIED

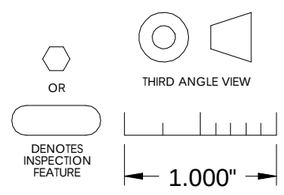

THIS DOCUMENT INCLUDING ALL DATA, SPECIFICATIONS, AND INFORMATION CONTAINED WITHIN IS CONFIDENTIAL AND PROPRIETARY TO BEERE PRECISION MEDICAL INSTRUMENTS BY RETENTION. THE RECIPIENT AGREES NOT TO REPRODUCE, DISCLOSE, OR MAKE USE OF ITS CONTENTS IN ANY WAY, WITHOUT PRIOR WRITTEN PERMISSION OF AN OFFICER OF BEERE PRECISION MEDICAL INSTRUMENTS.

BP101002-___(cc)

MATERIAL

HEAT TREAT

FINISH

REMOVE ALL BURRS | BREAK SHARP CORNERS

PART TO BE FREE OF DIRT, OIL AND CONTAMINANTS

UNSPECIFIED TOLERANCES

.X	±.020	ANGLE	±1°
.XX	±.010		
.XXX	±.005	MACHINE FINISH	32
.XXXX	±.0005		

CONCENTRICITY .005 T.I.R.
SQUARENESS .005 T.I.R.

DO NOT SCALE DRAWING

DRAWN	DATE
JMW	06/04/01
APPROVED	DATE

beere medical PRECISION INSTRUMENTS
5307 95TH AVE
KENOSHA, WI 53144
(262) 657-2800

TITLE
B-PRB, STR PLM IMP D-BIL
S-TPR 9.53"

SIZE	SUPERSEDED NO.	DRAWING NO.	REV
B		BP101002-___(cc)	B
SCALE 1:1		ILLUSTRATION	SHEET 1 OF 1