FOR REFERENCE ONLY

REVISIONS			
REV	DESCRIPTION	DATE/BY	ECN NO.
–	–	–	–

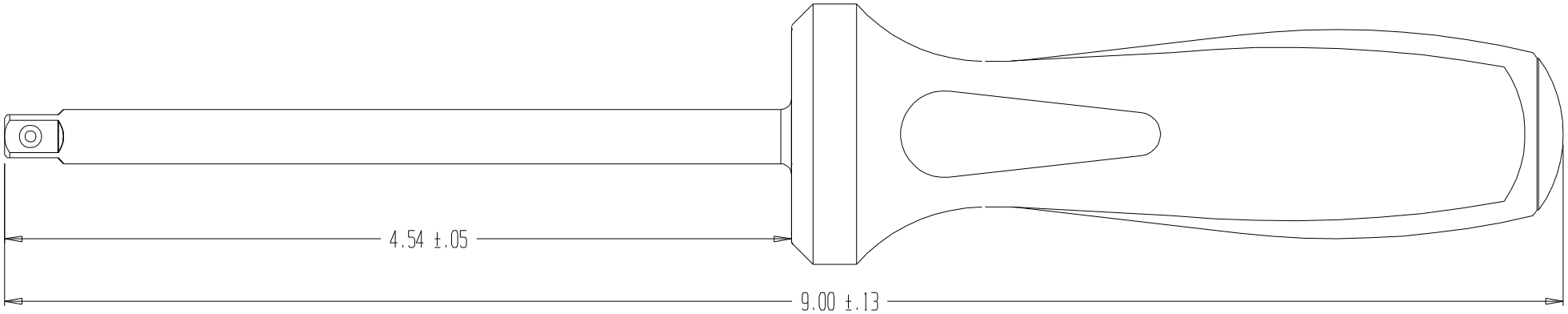

PRODUCT SPECIFICATIONS MUST BE FILLED IN AT TIME OF ORDER:

COMPLETE PART NUMBER: _____

TORQUE SETTING: _____ ±10% (60 LB-IN MAX)

COLOR OF HANDLE: _____

APPROVAL/DATE: _____

THIS DOCUMENT INCLUDING ALL DATA, SPECIFICATIONS, AND INFORMATION CONTAINED WITHIN IS CONFIDENTIAL AND PROPRIETARY TO BEERE PRECISION MEDICAL INSTRUMENTS, INC. BY RETENTION, THE RECIPIENT AGREES NOT TO REPRODUCE, DISCLOSE, OR MAKE USE OF ITS CONTENTS IN ANY WAY WITHOUT PRIOR WRITTEN PERMISSION OF AN OFFICER OF BEERE PRECISION MEDICAL INSTRUMENTS, INC.

MATERIAL

HEAT TREAT

FINISH

REMOVE ALL BURRS | BREAK SHARP CORNERS

PART TO BE FREE OF DIRT, OIL, AND CONTAMINANTS

UNSPECIFIED TOLERANCES

.X	+/-.020	ANGLE	+/- 1°
.XX	+/-.010	MACHINE FINISH	32 ✓
.XXX	+/-.005		
.XXXX	+/-.0005		

CONCENTRICITY .005 T.I.R.
SQUARENESS .001 PER IN.

DO NOT SCALE DRAWING

DRAWN CLT | DATE 3/14/96

APPROVED | DATE

BEERE PRECISION MEDICAL INSTRUMENTS, INC.
2503 LINCOLNWOOD CT., RACINE WI 53403 (414) 554-8505

TITLE TORQUE LIMITING SCREW DRIVER
1/4" MALE SQUARE DRIVE

SIZE A | SUPERSEDED NO | DWG NO SC201XXX-___(cc) | REV A

SCALE FULL | ILLUSTRATION | SHEET 1 OF 1